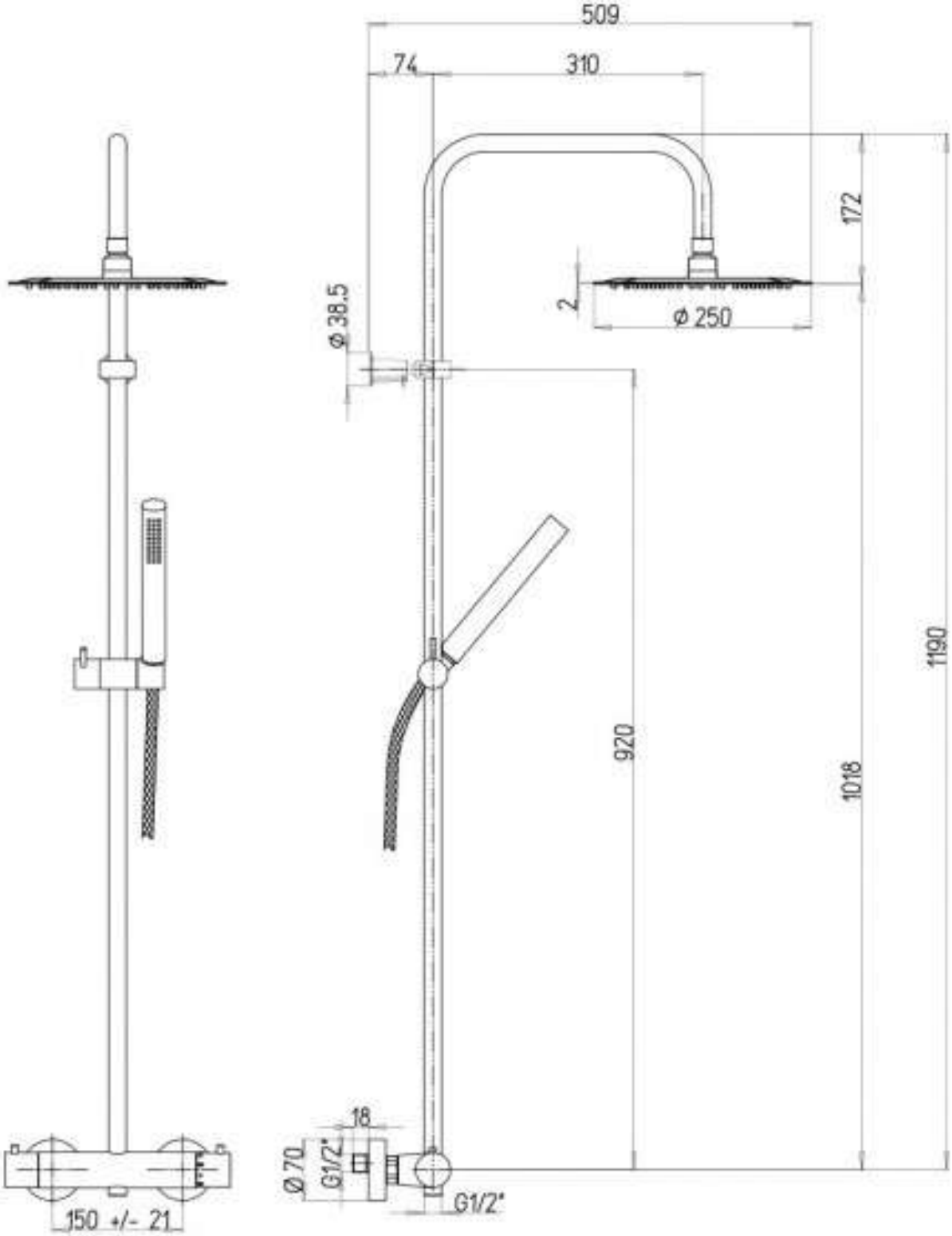
509
74
310
172
2
ø 250
ø 38.5
1190
920
1018
18
Ø 70
G1/2"
G1/2"
150 +/- 21